SXYBx 3 axes / ZFH

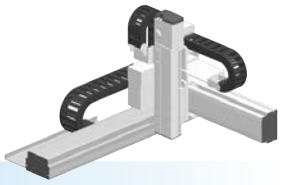

Arm type | Cable carrier | Z-axis: clamped table / moving base type (200W)

Ordering method

SXYBx - C - [ ] - [ ] - [ ] - ZFH - [ ] - [ ] - RCX340-3 - [ ] - [ ] - [ ] - [ ] - [ ] - [ ] - [ ]

Model	Cable	Combination	X-axis stroke	Y-axis stroke	ZR-axis	Z-axis stroke	Cable	Controller / Number of controllable axes	Safety standard	Option A (OP.A)	Option B (OP.B)	Option C (OP.C)	Option D (OP.D)	Option E (OP.E)	Absolute battery
		A1 A2 A3 A4	15 to 305cm	15 to 45cm		15 to 35cm	3L: 3.5m 5L: 5m 10L: 10m								

Specify various controller setting items. RCX340 ▶ P.678

Specification

	X-axis	Y-axis	Z-axis
Axis construction Note 1	B14H	B14	F10H-BK
AC servo motor output (W)	200	100	200
Repeatability Note 2 (mm)	+/-0.04	+/-0.04	+/-0.01
Drive system	Timing belt	Timing belt	Ball screw ϕ15
Ball screw lead Note 3 (Deceleration ratio) (mm)	Equivalent to lead 25	Equivalent to lead 25	10
Maximum speed (mm/sec)	1875	1875	600
Moving range (mm)	150 to 3050	150 to 450	150 to 350
Robot cable length (m)	Standard: 3.5 Option: 5,10		

Note 1. Use caution that the flame machining (installation holes, tap holes) differs from single-axis robots'.
Note 2. Positioning repeatability in one direction.
Note 3. Leads not listed in the catalog are also available. Contact us for details.

Maximum payload (kg)

	Z stroke (mm)		
Y stroke (mm)	150	250	350
150	7	6	5
250	5	4	3
350	3	2	1
450	1	–	–

Controller

Controller	Operation method
RCX340	Programming / I/O point trace / Remote command / Operation using RS-232C communication

SXYBx 3 axes / ZFH A1

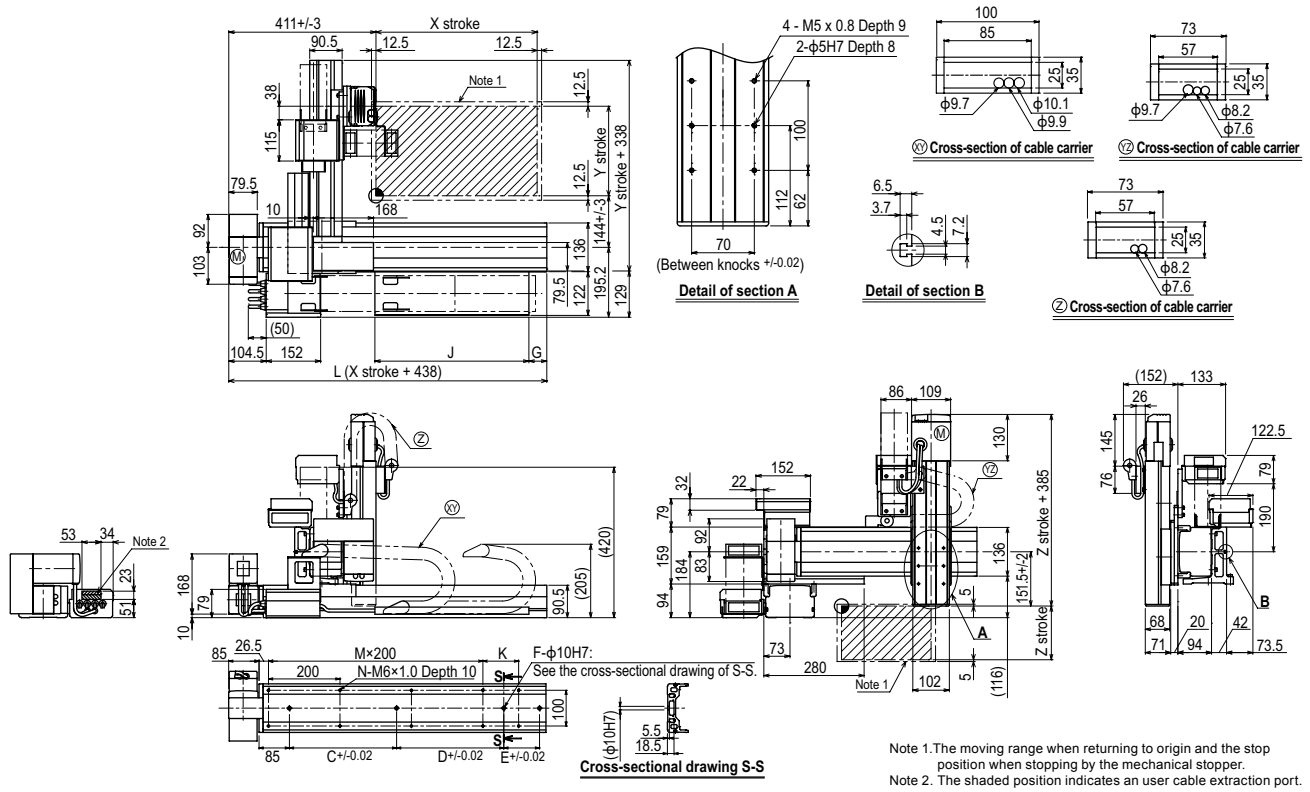

Note 1.The moving range when returning to origin and the stop position when stopping by the mechanical stopper.
Note 2. The shaded position indicates an user cable extraction port.

X stroke	150	250	350	450	550	650	750	850	950	1050	1150	1250	1350	1450	1550	1650	1750	1850	1950	2050	2150	2250	2350	2450	2550	2650	2750	2850	2950	3050
L	588	688	788	888	988	1088	1188	1288	1388	1488	1588	1688	1788	1888	1988	2088	2188	2288	2388	2488	2588	2688	2788	2888	2988	3088	3188	3288	3388	3488
K	200	100	200	100	200	100	200	100	200	100	200	100	200	100	200	100	200	100	200	100	200	100	200	100	200	100	200	100	200	100
C	240	420	600	600	780	780	960	960	1140	1140	1140	1140	1140	1140	1140	1140	1140	1140	1140	1140	1140	1140	1140	1140	1140	1140	1140	1140	1140	1140
D	-	-	-	-	-	-	-	-	-	-	240	240	240	420	600	600	780	780	960	960	1140	1140	1140	1140	1140	1140	1140	1140	1140	1140
E	-	-	-	-	-	-	-	-	-	-	-	-	-	-	-	-	-	-	-	-	-	-	240	240	420	420	600	600	780	960
F	2	2	2	2	2	2	2	2	2	2	3	3	3	3	3	3	3	3	3	3	3	3	4	4	4	4	4	4	4	4
M	1	2	2	3	3	4	4	5	5	6	6	7	7	8	8	9	9	10	10	11	11	12	12	13	13	14	14	15	15	16
N	6	8	8	10	10	12	12	14	14	16	16	18	18	20	20	22	22	24	24	26	26	28	28	30	30	32	32	34	34	36
G	0	50	0	50	0	50	0	50	0	50	0	50	0	50	0	50	0	50	0	50	0	50	0	50	0	50	0	50	0	50
J	330	330	430	430	530	530	630	630	730	730	830	830	930	930	1030	1030	1130	1130	1230	1230	1330	1330	1430	1430	1530	1530	1630	1630	1730	1730

Y stroke	150	250	350	450
Z stroke	150	250	350	

Controller RCX340 ▶ 678